IRAS FISH PUMP

TYPE PV2000

CAPACITY APPROX 180 TON PER HOUR

WITH NEW TANK OF 3000 LITER

ELECTRIC POWER 55 KW 50 HZ

66 KW 60 HZ

ALMOST NOT USED

THIS TYPE IS DESIGNED FOR INSTALLATION ON A FLOATING UNIT TO EMPTY THE VESSELS

SEE NEXT PAGE

SEE NEXT PAGE

Samson
Samson Pumps
Telefon +45 87 50 93 00
Telefax +45 87 50 93 01
CE
Type
W16R45A1
Nr.
433765-2
117635
106912

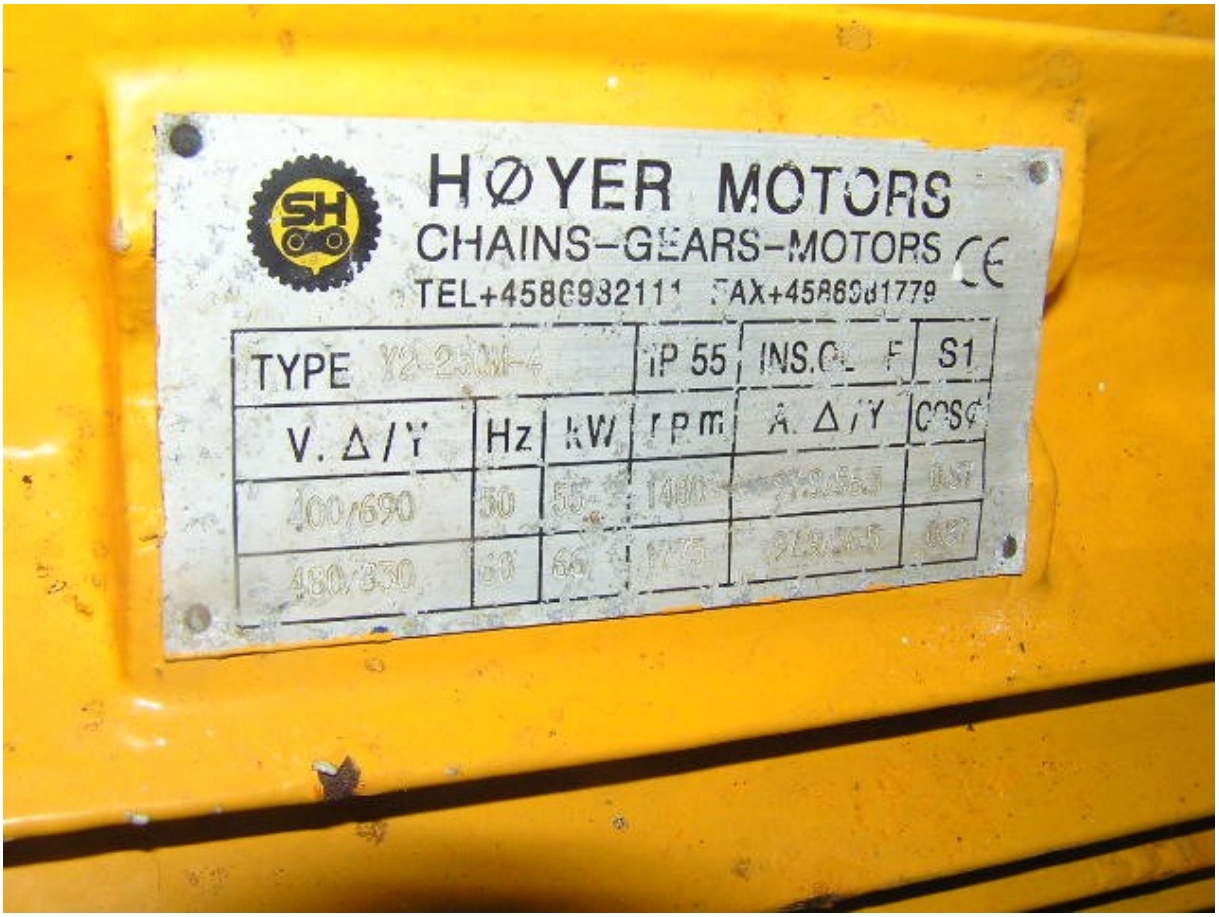
HØYER MOTORS
CHAINS-GEARS-MOTORS
TEL+4586932111
TYPE
IP 55
S1
V. Δ/Y
Hz
kW
rpm
A. Δ/Y
cosφ
400/690
50
55
480/830
60
66

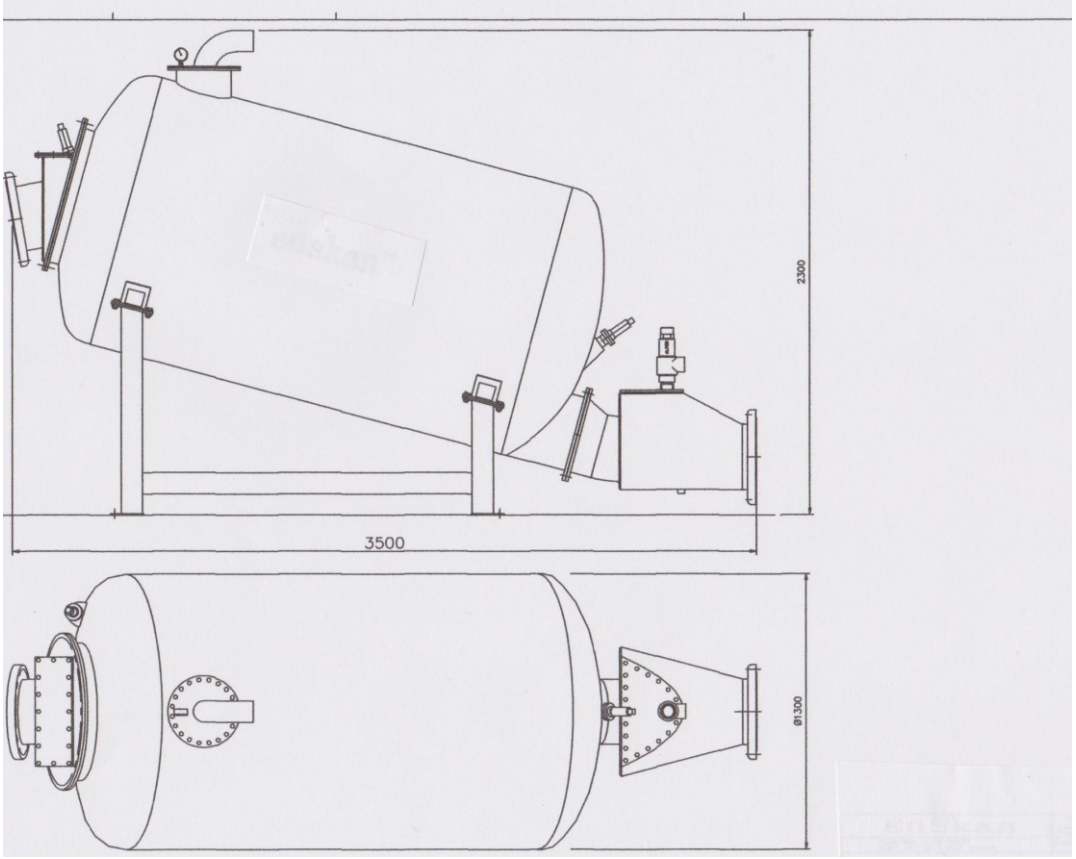
2300
3500
Ø1300

NEW 3000 LITER TANK